MC74AC125, MC74ACT125

Quad Buffer with 3-State Outputs

- Outputs Source/Sink
- ′ACT125 Has TTL Compatible Inputs

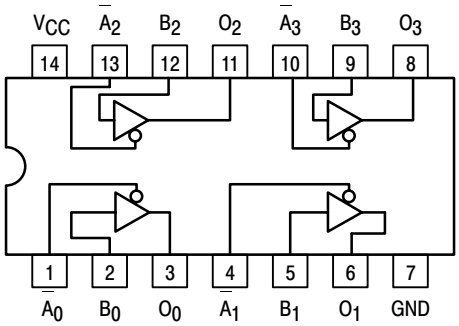

Figure 1. Pinout: 14–Lead Packages Conductors
(Top View)

PIN ASSIGNMENT

PIN	FUNCTION
A_n, B_n	Inputs
O_n	Outputs

FUNCTION TABLE

Inputs		Output
$\overline{A}_n$	B_n	O_n
L	L	L
L	H	H
H	X	Z

NOTE: H = High Voltage Level;
L = Low Voltage Level;
Z = High Impedance;
X = Immaterial

ON Semiconductor™

http://onsemi.com

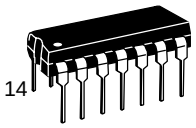

PDIP–14
N SUFFIX
CASE 646

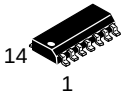

SO–14
D SUFFIX
CASE 751A

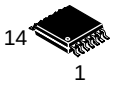

TSSOP–14
DT SUFFIX
CASE 948G

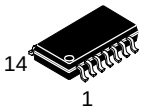

EIAJ–14
M SUFFIX
CASE 965

ORDERING INFORMATION

Device	Package	Shipping
MC74AC125N	PDIP–14	25 Units/Rail
MC74ACT125N	PDIP–14	25 Units/Rail
MC74AC125D	SOIC–14	55 Units/Rail
MC74AC125DR2	SOIC–14	2500 Tape & Reel
MC74ACT125D	SOIC–14	55 Units/Rail
MC74ACT125DR2	SOIC–14	2500 Tape & Reel
MC74AC125DT	TSSOP–14	96 Units/Rail
MC74AC125DTR2	TSSOP–14	2500 Tape & Reel
MC74ACT125DT	TSSOP–14	96 Units/Rail
MC74ACT125DTR2	TSSOP–14	2500 Tape & Reel
MC74AC125M	EIAJ–14	50 Units/Rail
MC74AC125MEL	EIAJ–14	2000 Tape & Reel
MC74ACT125M	EIAJ–14	50 Units/Rail
MC74ACT125MEL	EIAJ–14	2000 Tape & Reel

DEVICE MARKING INFORMATION

See general marking information in the device marking section on page 5 of this data sheet.

© Semiconductor Components Industries, LLC, 2001

May, 2001 – Rev. 5
Publication Order Number:
MC74AC125/D

MAXIMUM RATINGS*

Symbol	Parameter	Value	Unit
V_{CC}	DC Supply Voltage (Referenced to GND)	–0.5 to +7.0	V
V_{in}	DC Input Voltage (Referenced to GND)	–0.5 to V_{CC} + 0.5	V
V_{out}	DC Output Voltage (Referenced to GND)	–0.5 to V_{CC} + 0.5	V
I_{in}	DC Input Current, per Pin	± 20	mA
I_{out}	DC Output Sink/Source Current, per Pin	± 50	mA
I_{CC}	DC V_{CC} or GND Current per Output Pin	± 50	mA
T_{stg}	Storage Temperature	–65 to +150	°C

*Maximum Ratings are those values beyond which damage to the device may occur. Functional operation should be restricted to the Recommended Operating Conditions.

RECOMMENDED OPERATING CONDITIONS

Symbol	Parameter		Min	Typ	Max	Unit
V_{CC}	Supply Voltage	′AC	2.0	5.0	6.0	V
		′ACT	4.5	5.0	5.5	
V_{in}, V_{out}	DC Input Voltage, Output Voltage (Ref. to GND)		0	–	V_{CC}	V
t_r, t_f	Input Rise and Fall Time (Note 1) ′AC Devices except Schmitt Inputs	V_{CC} @ 3.0 V	–	150	–	ns/V
		V_{CC} @ 4.5 V	–	40	–	
		V_{CC} @ 5.5 V	–	25	–	
T_J	Junction Temperature (PDIP)		–	–	140	°C
T_A	Operating Ambient Temperature Range		–40	25	85	°C
I_{OH}	Output Current – HIGH		–	–	–24	mA
I_{OL}	Output Current – LOW		–	–	24	mA

1. V_{in} from 30% to 70% V_{CC}; see individual Data Sheets for devices that differ from the typical input rise and fall times.
2. V_{in} from 0.8 V to 2.0 V; see individual Data Sheets for devices that differ from the typical input rise and fall times.

DC CHARACTERISTICS

Symbol	Parameter	V_{CC} (V)	74AC T_A = +25°C Typ	74AC T_A = +25°C Guaranteed Limits	74AC T_A = –40°C to +85°C Guaranteed Limits	Unit	Conditions
V_{IH}	Minimum High Level Input Voltage	3.0 4.5 5.5	1.5 2.25 2.75	2.1 3.15 3.85	2.1 3.15 3.85	V	V_{OUT} = 0.1 V or V_{CC} – 0.1 V
V_{IL}	Maximum Low Level Input Voltage	3.0 4.5 5.5	1.5 2.25 2.75	0.9 1.35 1.65	0.9 1.35 1.65	V	V_{OUT} = 0.1 V or V_{CC} – 0.1 V
V_{OH}	Minimum High Level Output Voltage	3.0 4.5 5.5	2.99 4.46 5.49	2.9 4.4 5.4	2.9 4.4 5.4	V	I_{OUT} = – 50 μA
		3.0 4.5 5.5	– – –	2.56 3.86 4.86	2.46 3.76 4.76	V	*V_{IN} = V_{IL} or V_{IH} I_{OH} –12 mA – 24 mA – 24 mA
V_{OL}	Minimum Low Level Output Voltage	3.0 4.5 5.5	0.002 0.001 0.001	0.1 0.1 0.1	0.1 0.1 0.1	V	I_{OUT} = 50 μA
		3.0 4.5 5.5	– – –	0.36 0.36 0.36	0.44 0.44 0.44	V	*V_{IN} = V_{IL} or V_{IH} I_{OL} 12 mA 24 mA 24 mA
I_{IN}	Maximum Input Leakage Current	5.5	–	±0.1	±1.0	μA	V_I = V_{CC}, GND
I_{OZ}	V_I (OE) = V_{IL}, V_{IH} V_I = V_{CC}, GND V_O = V_{CC} , GND	5.5	–	±0.5	±5.0	μA	V_I (OE) = V_{IL}, V_{IH} V_I = V_{CC}, GND V_O = V_{CC}, GND
I_{OLD}	†Minimum Dynamic Output Current	5.5	–	–	75	mA	V_{OLD} = 1.65 V Max
I_{OHD}		5.5	–	–	–75	mA	V_{OHD} = 3.85 V Min
I_{CC}	Maximum Quiescent Supply Current	5.5	–	8.0	80	μA	V_{IN} = V_{CC} or GND

*All outputs loaded; thresholds on input associated with output under test.
†Maximum test duration 2.0 ms, one input loaded at a time.

NOTE: I_{IN} and I_{CC} @ 3.0 V are guaranteed to be less than or equal to the respective limit @ 5.5 V.

AC CHARACTERISTICS

Symbol	Parameter	V_{CC}* (V)	74AC T_A = +25°C C_L = 50 pF		74AC T_A = –40°C to +85°C C_L = 50 pF		Unit
			Min	Max	Min	Max	
t_{PLH}	Propagation Delay Data to Output	3.3 5.0	1.0 1.0	9.0 7.0	1.0 1.0	10 7.5	ns
t_{PHL}	Propagation Delay Data to Output	3.3 5.0	1.0 1.0	9.0 7.0	1.0 1.0	10 7.5	ns
t_{PZH}	Output Enable Time	3.3 5.0	1.0 1.0	10.5 7.0	1.0 1.0	11 8.0	ns
t_{PZL}	Output Enable Time	3.3 5.0	1.0 1.0	10 8.0	1.0 1.0	11 8.5	ns
t_{PHZ}	Output Disable Time	3.3 5.0	1.0 1.0	10 9.0	1.0 1.0	10.5 9.5	ns
t_{PLZ}	Output Disable Time	3.3 5.0	1.0 1.0	10.5 9.0	1.0 1.0	11.5 9.5	ns

*Voltage Range 3.3 V is 3.3 V ±0.3 V.
Voltage Range 5.0 V is 5.0 V ±0.5 V.

DC CHARACTERISTICS

Symbol	Parameter	V_{CC} (V)	74ACT T_A = +25°C		74ACT T_A = –40°C to +85°C	Unit	Conditions
			Typ	Guaranteed Limits			
V_{IH}	Minimum High Level Input Voltage	4.5 5.5	1.5 1.5	2.2 2.0	2.0 2.0	V	V_{OUT} = 0.1 V or V_{CC} – 0.1 V
V_{IL}	Maximum Low Level Input Voltage	4.5 5.5	1.5 1.5	0.8 0.8	0.8 0.8	V	V_{OUT} = 0.1 V or V_{CC} – 0.1 V
V_{OH}	Minimum High Level Output Voltage	4.5 5.5	4.49 5.49	4.4 5.4	4.4 5.4	V	I_{OUT} = – 50 μA
		4.5 5.5	– –	3.86 4.86	3.76 4.76	V	*V_{IN} = V_{IL} or V_{IH} I_{OH} – 24 mA – 24 mA
V_{OL}	Minimum Low Level Output Voltage	4.5 5.5	0.001 0.001	0.1 0.1	0.1 0.1	V	I_{OUT} = – 50 μA
		4.5 5.5	– –	0.36 0.36	0.44 0.44	V	*V_{IN} = V_{IL} or V_{IH} I_{OH} – 24 mA – 24 mA
I_{IN}	Maximum Input Leakage Current	5.5	–	±0.1	±1.0	μA	V_I = V_{CC}, GND
I_{OZ}	V_I (OE) = V_{IL}, V_{IH} V_I = V_{CC}, GND V_O = V_{CC} , GND	5.5	–	±0.5	±5.0	μA	V_I (OE) = V_{IL}, V_{IH} V_I = V_{CC}, GND V_O = V_{CC}, GND
ΔI_{CCT}	Additional Max. I_{CC}/Input	5.5	0.6	–	1.5	mA	V_I = V_{CC} – 2.1 V
I_{OLD}	†Minimum Dynamic Output Current	5.5	–	–	75	mA	V_{OLD} = 1.65 V Max
I_{OHD}		5.5	–	–	–75	mA	V_{OHD} = 3.85 V Min
I_{CC}	Maximum Quiescent Supply Current	5.5	–	8.0	80	μA	V_{IN} = V_{CC} or GND

*All outputs loaded; thresholds on input associated with output under test.
†Maximum test duration 2.0 ms, one input loaded at a time.

AC CHARACTERISTICS

Symbol	Parameter	V_{CC}* (V)	74ACT T_A = +25°C C_L = 50 pF		74ACT T_A = –40°C to +85°C C_L = 50 pF		Unit
			Min	Max	Min	Max	
t_{PLH}	Propagation Delay Data to Output	5.0	1.0	9.0	1.0	10	ns
t_{PHL}	Propagation Delay Data to Output	5.0	1.0	9.0	1.0	10	ns
t_{PZH}	Output Enable Time	5.0	1.0	8.5	1.0	9.5	ns
t_{PZL}	Output Enable Time	5.0	1.0	9.5	1.0	10.5	ns
t_{PHZ}	Output Disable Time	5.0	1.0	9.5	1.0	10.5	ns
t_{PLZ}	Output Disable Time	5.0	1.0	10	1.0	10.5	ns

*Voltage Range 5.0 V is 5.0 V ±0.5 V.

CAPACITANCE

Symbol	Parameter	Value Typ	Unit	Test Conditions
C_{IN}	Input Capacitance	4.5	pF	V_{CC} = 5.0 V
C_{PD}	Power Dissipation Capacitance	45	pF	V_{CC} = 5.0 V

MARKING DIAGRAMS

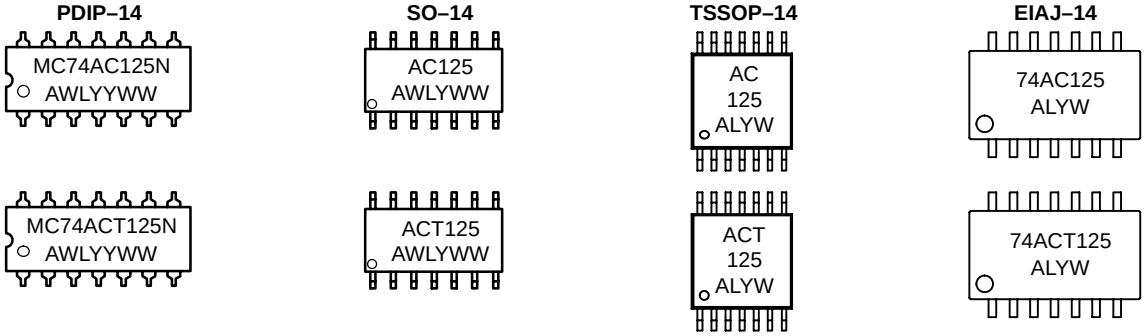

A = Assembly Location
WL, L = Wafer Lot
YY, Y = Year
WW, W = Work Week

PACKAGE DIMENSIONS

PDIP–14
N SUFFIX
14 PIN PLASTIC DIP PACKAGE
CASE 646–06
ISSUE M

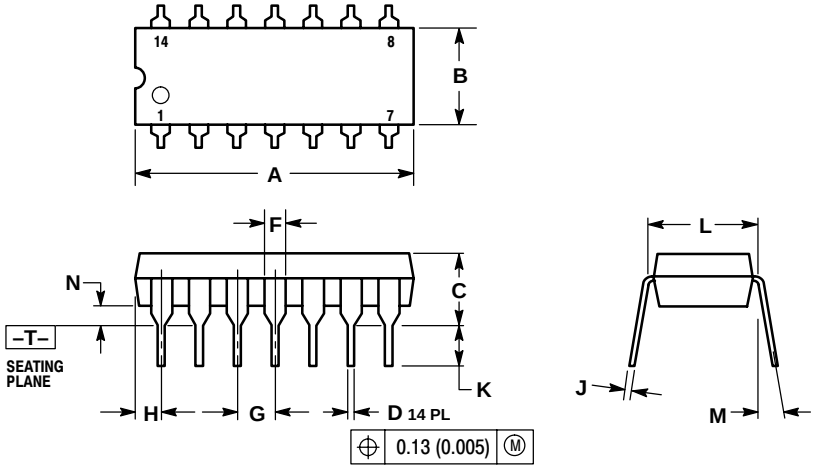

NOTES:
1. DIMENSIONING AND TOLERANCING PER ANSI Y14.5M, 1982.
2. CONTROLLING DIMENSION: INCH.
3. DIMENSION L TO CENTER OF LEADS WHEN FORMED PARALLEL.
4. DIMENSION B DOES NOT INCLUDE MOLD FLASH.
5. ROUNDED CORNERS OPTIONAL.

	INCHES		MILLIMETERS	
DIM	MIN	MAX	MIN	MAX
A	0.715	0.770	18.16	18.80
B	0.240	0.260	6.10	6.60
C	0.145	0.185	3.69	4.69
D	0.015	0.021	0.38	0.53
F	0.040	0.070	1.02	1.78
G	0.100 BSC		2.54 BSC	
H	0.052	0.095	1.32	2.41
J	0.008	0.015	0.20	0.38
K	0.115	0.135	2.92	3.43
L	0.290	0.310	7.37	7.87
M	---	10°	---	10°
N	0.015	0.039	0.38	1.01

SO–14
D SUFFIX
14 PIN PLASTIC SOIC PACKAGE
CASE 751A–03
ISSUE F

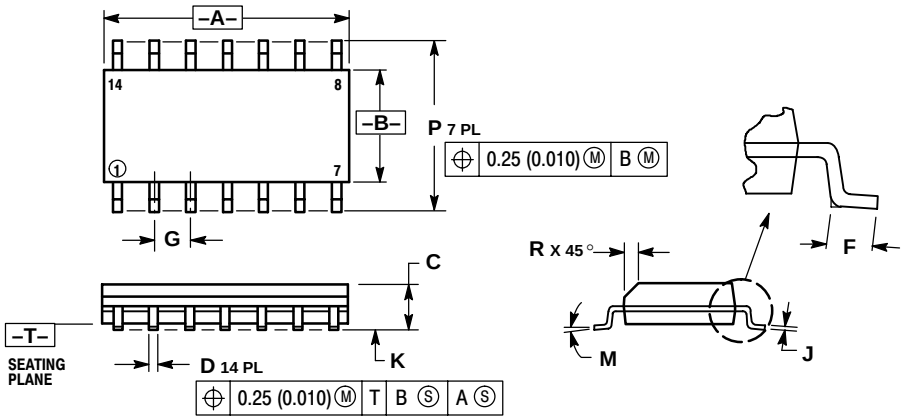

NOTES:
1. DIMENSIONING AND TOLERANCING PER ANSI Y14.5M, 1982.
2. CONTROLLING DIMENSION: MILLIMETER.
3. DIMENSIONS A AND B DO NOT INCLUDE MOLD PROTRUSION.
4. MAXIMUM MOLD PROTRUSION 0.15 (0.006) PER SIDE.
5. DIMENSION D DOES NOT INCLUDE DAMBAR PROTRUSION. ALLOWABLE DAMBAR PROTRUSION SHALL BE 0.127 (0.005) TOTAL IN EXCESS OF THE D DIMENSION AT MAXIMUM MATERIAL CONDITION.

	MILLIMETERS		INCHES	
DIM	MIN	MAX	MIN	MAX
A	8.55	8.75	0.337	0.344
B	3.80	4.00	0.150	0.157
C	1.35	1.75	0.054	0.068
D	0.35	0.49	0.014	0.019
F	0.40	1.25	0.016	0.049
G	1.27 BSC		0.050 BSC	
J	0.19	0.25	0.008	0.009
K	0.10	0.25	0.004	0.009
M	0°	7°	0°	7°
P	5.80	6.20	0.228	0.244
R	0.25	0.50	0.010	0.019

PACKAGE DIMENSIONS

TSSOP–14
DT SUFFIX
14 PIN PLASTIC TSSOP PACKAGE
CASE 948G–01
ISSUE O

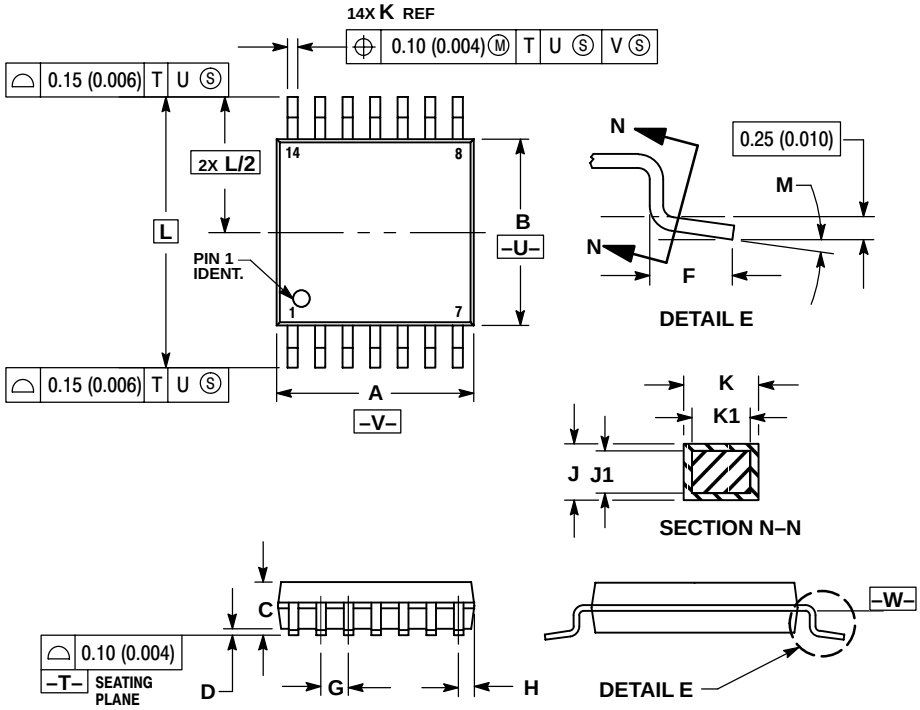

NOTES:
1. DIMENSIONING AND TOLERANCING PER ANSI Y14.5M, 1982.
2. CONTROLLING DIMENSION: MILLIMETER.
3. DIMENSION A DOES NOT INCLUDE MOLD FLASH, PROTRUSIONS OR GATE BURRS. MOLD FLASH OR GATE BURRS SHALL NOT EXCEED 0.15 (0.006) PER SIDE.
4. DIMENSION B DOES NOT INCLUDE INTERLEAD FLASH OR PROTRUSION. INTERLEAD FLASH OR PROTRUSION SHALL NOT EXCEED 0.25 (0.010) PER SIDE.
5. DIMENSION K DOES NOT INCLUDE DAMBAR PROTRUSION. ALLOWABLE DAMBAR PROTRUSION SHALL BE 0.08 (0.003) TOTAL IN EXCESS OF THE K DIMENSION AT MAXIMUM MATERIAL CONDITION.
6. TERMINAL NUMBERS ARE SHOWN FOR REFERENCE ONLY.
7. DIMENSION A AND B ARE TO BE DETERMINED AT DATUM PLANE –W–.

	MILLIMETERS		INCHES	
DIM	MIN	MAX	MIN	MAX
A	4.90	5.10	0.193	0.200
B	4.30	4.50	0.169	0.177
C	---	1.20	---	0.047
D	0.05	0.15	0.002	0.006
F	0.50	0.75	0.020	0.030
G	0.65 BSC		0.026 BSC	
H	0.50	0.60	0.020	0.024
J	0.09	0.20	0.004	0.008
J1	0.09	0.16	0.004	0.006
K	0.19	0.30	0.007	0.012
K1	0.19	0.25	0.007	0.010
L	6.40 BSC		0.252 BSC	
M	0 °	8 °	0 °	8 °

EIAJ–14
M SUFFIX
14 PIN PLASTIC EIAJ PACKAGE
CASE 965–01
ISSUE O

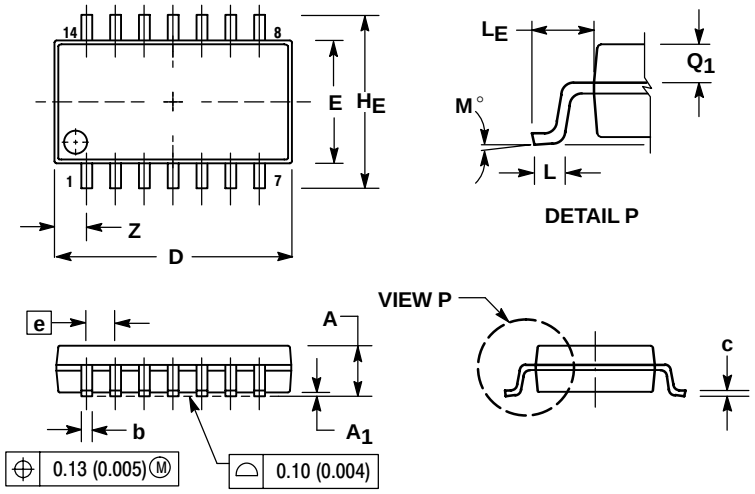

NOTES:
1. DIMENSIONING AND TOLERANCING PER ANSI Y14.5M, 1982.
2. CONTROLLING DIMENSION: MILLIMETER.
3. DIMENSIONS D AND E DO NOT INCLUDE MOLD FLASH OR PROTRUSIONS AND ARE MEASURED AT THE PARTING LINE. MOLD FLASH OR PROTRUSIONS SHALL NOT EXCEED 0.15 (0.006) PER SIDE.
4. TERMINAL NUMBERS ARE SHOWN FOR REFERENCE ONLY.
5. THE LEAD WIDTH DIMENSION (b) DOES NOT INCLUDE DAMBAR PROTRUSION. ALLOWABLE DAMBAR PROTRUSION SHALL BE 0.08 (0.003) TOTAL IN EXCESS OF THE LEAD WIDTH DIMENSION AT MAXIMUM MATERIAL CONDITION. DAMBAR CANNOT BE LOCATED ON THE LOWER RADIUS OR THE FOOT. MINIMUM SPACE BETWEEN PROTRUSIONS AND ADJACENT LEAD TO BE 0.46 (0.018).

	MILLIMETERS		INCHES	
DIM	MIN	MAX	MIN	MAX
A	---	2.05	---	0.081
A_1	0.05	0.20	0.002	0.008
b	0.35	0.50	0.014	0.020
c	0.18	0.27	0.007	0.011
D	9.90	10.50	0.390	0.413
E	5.10	5.45	0.201	0.215
e	1.27 BSC		0.050 BSC	
H_E	7.40	8.20	0.291	0.323
0.50	0.50	0.85	0.020	0.033
L_E	1.10	1.50	0.043	0.059
M	0 °	10 °	0 °	10 °
Q_1	0.70	0.90	0.028	0.035
Z	---	1.42	---	0.056

ON Semiconductor and are trademarks of Semiconductor Components Industries, LLC (SCILLC). SCILLC reserves the right to make changes without further notice to any products herein. SCILLC makes no warranty, representation or guarantee regarding the suitability of its products for any particular purpose, nor does SCILLC assume any liability arising out of the application or use of any product or circuit, and specifically disclaims any and all liability, including without limitation special, consequential or incidental damages. "Typical" parameters which may be provided in SCILLC data sheets and/or specifications can and do vary in different applications and actual performance may vary over time. All operating parameters, including "Typicals" must be validated for each customer application by customer's technical experts. SCILLC does not convey any license under its patent rights nor the rights of others. SCILLC products are not designed, intended, or authorized for use as components in systems intended for surgical implant into the body, or other applications intended to support or sustain life, or for any other application in which the failure of the SCILLC product could create a situation where personal injury or death may occur. Should Buyer purchase or use SCILLC products for any such unintended or unauthorized application, Buyer shall indemnify and hold SCILLC and its officers, employees, subsidiaries, affiliates, and distributors harmless against all claims, costs, damages, and expenses, and reasonable attorney fees arising out of, directly or indirectly, any claim of personal injury or death associated with such unintended or unauthorized use, even if such claim alleges that SCILLC was negligent regarding the design or manufacture of the part. SCILLC is an Equal Opportunity/Affirmative Action Employer.

PUBLICATION ORDERING INFORMATION

Literature Fulfillment:
Literature Distribution Center for ON Semiconductor
P.O. Box 5163, Denver, Colorado 80217 USA
Phone: 303–675–2175 or 800–344–3860 Toll Free USA/Canada
Fax: 303–675–2176 or 800–344–3867 Toll Free USA/Canada
Email: ONlit@hibbertco.com

N. American Technical Support: 800–282–9855 Toll Free USA/Canada

JAPAN: ON Semiconductor, Japan Customer Focus Center
4–32–1 Nishi–Gotanda, Shinagawa–ku, Tokyo, Japan 141–0031
Phone: 81–3–5740–2700
Email: r14525@onsemi.com

ON Semiconductor Website: http://onsemi.com

For additional information, please contact your local Sales Representative.